Journal of Energy Engineering and Thermodynamics
ISSN: 2815-0945
Vol: 03, No. 06, Oct-Nov 2023
http://journal.hmjournals.com/index.php/JEET
DOI: https://doi.org/10.55529/jeet.36.1.12

Development of IoT Enabled Energy Saving Smart Lighting and HVAC System for Building Environment

Lindsey Velany Colaco[1*], Dr. Virani Hassanali[2], Mr. Mohinish Naik[3]

[1]Student, Department of Electronics and Tele Communication, Goa College of Engineering. Farmagudi, Goa, India.*
[2]HOD, Department of Electronics and TeleCommunication, Goa College of Engineering. Farmagudi, Goa, India.
[3]Firmware Architect, Spintly Fatorda, Margao, Goa, India.

Email: [2]virani@gec.ac.in, [3]mohinnaik0@gmail.com
Corresponding Email: [1]lvcolaco1999@gmail.com*

Received: 03 June 2023 **Accepted:** 20 August 2023 **Published:** 01 October 2023

Abstract: ***Most of the appliances used in office buildings such as the room lights, fans and Air Conditioners (AC) are manually operated, where one has to switch ON and OFF these appliances. If one tends to forget to turn OFF these switches, it will impose a major challenge in building economic stimulus for their fiscal development. It can thereby increase the amount of energy consumed and thus increasing the electricity bills. Therefore, there is an urgent need for improvement and use of a smart lighting system. This paper introduces the energy- saving, easy-to-install, wireless and low cost IoT based smart office lighting system which is suitable for installation in the office or departmental company. It uses an infrared human motion sensor (PIR Sensor) working in coordination with other sensors. When no one is there in the space, all lights, fans and Air Conditioners (AC) are turned OFF; otherwise they are turned ON to save energy. The same can be controlled via IoT and the internet. The system can easily realize energy saving and easy control of LED lighting.***

Keywords: ***Internet of Things (IoT), Passive Infrared (PIR) Sensor, AC.***

1. INTRODUCTION

We live in a world where everything is automated, from washing machine to ceiling fans. The world revolves around the word automation and automations are considered to next generations as they limit human involvement. They are self sufficient and therefore more effective than manual work. But lighting has yet to play a role in these changes. At present, there are many problems in the traditional office system, the most important of which is the waste of energy.

Copyright The Author(s) 2023.This is an Open Access Article distributed under the CC BY license. (http://creativecommons.org/licenses/by/4.0/)

Journal of Energy Engineering and Thermodynamics
ISSN: 2815-0945
Vol: 03, No. 06, Oct-Nov 2023
http://journal.hmjournals.com/index.php/JEET
DOI: https://doi.org/10.55529/jeet.36.1.12

The main purpose of this project is to use IoT to make lighting and air conditioning connected with Arduino board. The system includes a PIR sensor, relay, temperature/humidity sensor and Adafruit IO. Adafruit IO is a cloud service that we can connect to on the web. Its main function is to store information from one or more tables connected with sensors, to see them timely and later, but it can also perform other interesting tasks. The system periodically uses PIR sensors to monitor the room for PIR sensor response and respond appropriately to turning lights, fans and air conditioners ON and OFF of that area. Electricity is very important and to use it efficiently, there must be good lighting control to save it. PIR (Passive Infrared Sensor) sensors are used to identify who is in the room. It uses infrared signals to detect human movements. The dashboard also helps you monitor your home's lighting from anywhere in the world and also helps you control the electricity quality in each room. A smart lighting control system can provide us with the best lighting with proper control.

It can reduce the energy consumption of the office with the best energy use in business and life. It also expands its application area by presenting research ideas about electronic sensing technology and sensor sensing technology.

Proteus Design Suite simulation is used in the development and analysis of this system. By testing for numerous test cases and comparing the results, the design has demonstrated that it is dependable and efficient.

Literature Study

Despite being environmentally friendly, LED lighting is still unpopular as installation costs are still higher than existing lighting. This cost has dropped as LED manufacturing technology has improved, butoverall lighting costs are still prohibitive. People arelooking for sensor and network technology to improve the economic outcomes of LED lighting, and this type of lighting is becoming commercialized. These systems reduce energy consumption by reducing the power output of the lighting, instead of keeping the lighting constant when the user is not in the room or when the room is very bright. This shows the energy saving control system that determines customer satisfaction. Improve energy efficiency and satisfaction for residents by controlling uncontrollable lighting, taking into account location characteristics and behaviour. [1] References [2] and [3] show a system consisting of a passive infrared human motion sensor (passive infrared (PIR) sensor), an Arduino Uno, and a 2-channel relay module that uses a PIR sensor to detect and control motion light processing by computer. The function of the system is to turn on the light when someone enters the classroom and automatically turn it off when no one is present. Lighting in the office or home is often controlled directly with an on/off switch. Of course, the user can connect a personal computer (PC) to turn the light on and off remotely, but this PC needs to be controlled 24 hours a day, which requires high cost and effort [4] -[5]. Some designs require special hardware and software to be installed to control the lights, resulting in exorbitant costs. Also, these systems cannot detect human body temperature or indoor light [6]-[7]. There is some research on air conditioners using the Internet of Things. K. Venkatesan and U. Ramachandraiah [8] developed real-time monitoring of air conditioning systems in communication and data center environments. Many air conditioners are installed in

Copyright The Author(s) 2023.This is an Open Access Article distributed under the CC BY license. (http://creativecommons.org/licenses/by/4.0/)

Journal of Energy Engineering and Thermodynamics
ISSN: 2815-0945
Vol: 03, No. 06, Oct-Nov 2023
http://journal.hmjournals.com/index.php/JEET
DOI: https://doi.org/10.55529/jeet.36.1.12

telecommunications and data centers to reduce heat. This study develops the maintenance program of individual air conditioners. If the cooling is not sufficient, some units are started. The cost of the air conditioner to be turned on depends on the room temperature. In addition, the status and operating time ofthe air conditioner are monitored online. Wei Song et al. This work [9] uses the Internet of Things to solve this problem. Internet of Things technology is based on intelligent control, including smart gateways, smart meters and cloud computing modules. This work uses Zigbee communication protocol and realizes automatic detection of smart meters via broadcast. This paper implements IoT technology for power efficiency. The system developed in this paper is named as Termo. Termo is composed of an Arduino UNO microcontroller, PIR sensor, temperature sensor, humidity sensor, relay and an infrared LED transmitter. As the PIR sensor senses the movement in the defined space, the lights and air conditioners are changed tospecified levels via relays.

2. PROPOSED METHODOLOGY

A. Block Diagram

Figure 1 shows the block diagram of the proposed system. It has Arduino UNO microcontroller, PIR sensor, humidity sensor, relay network, infrared LED emitter, communication module, light bulb, air conditioning system, motor (fan) and power module. Arduino microcontroller is a WI-FI microchip. This microcontroller allows us to connect to the WI-FI network; It is based on ATmega328P with integrated ESP8266WiFi module. The Arduino used in this work is to connect the device to the internet using WI-FI to monitor the connected device online. Data from the device is sent to the server over a wireless network using Adafruit IO. Adafruit IO is a cloud service that we can connect to on the web. Its main function is to store information from one or more tables connected with sensors, to see them timely and later, butit can also perform other interesting tasks.

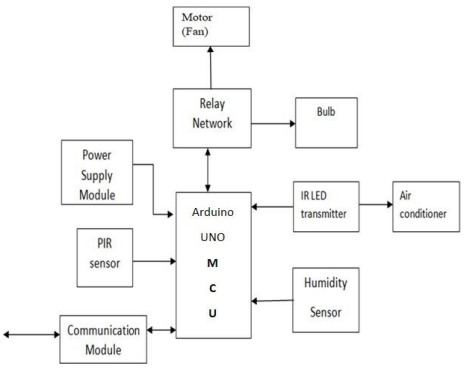

Fig1. Block Diagram

It is used to identify the humidity sensor. Information about temperature and humidity will be sent to the server and the server will check whether the model is suitable for increasing or decreasing the fan/air conditioning temperature. The server will send the command according to this pattern. When the signal is detected in the specified area, the PIR sensor sends a signal to the microcontroller, which activates the network relay to turn on/off the lights and fan motors. It also detects the infrared signal from the remote controller via the infrared LED

Copyright The Author(s) 2023.This is an Open Access Article distributed under the CC BY license. (http://creativecommons.org/licenses/by/4.0/)

Journal of Energy Engineering and Thermodynamics
ISSN: 2815-0945
Vol: 03, No. 06, Oct-Nov 2023
http://journal.hmjournals.com/index.php/JEET
DOI: https://doi.org/10.55529/jeet.36.1.12

transmitter, determining whether to increase the temperature of the air conditioner or not. The user can automatically connect to this system through the Adafruit IO module which will store the data sent by the microcontroller and can then allow the user to remotely control the parameters or to manually turn ON and OFF the lights, fans and air conditioning system.

3. SIMULATION AND RESULTS

The proposed design circuitry is developed and simulated using Proteus Design Suite 8.0 to analyzesystem operation and verify the obtained results.

Interfacing Pir Sensor to Arduino

The below figure shows the schematic of PIR sensor interfaced with Arduino UNO along with a red led, resistor, virtual terminal and logic state components in the workspace.

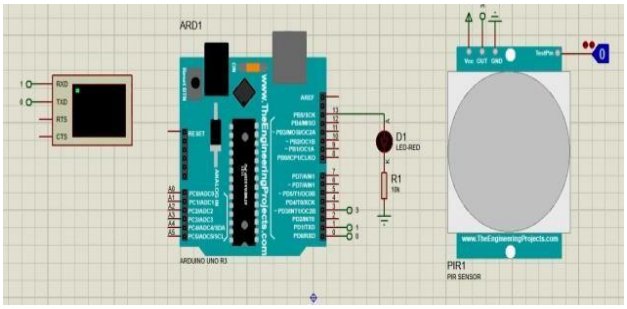

Fig 2: Interfacing PIR sensor to Arduino

In the beginning, 10 seconds delay is added to calibrate the sensor and the serial will print out “calibrating sensor”. After 10 seconds, the serial prints out “done” and “sensor active” (fig3).



Fig3: Calibrating the PIR sensor

Below figure shows the results of the simulated schematic. Toggle the LOGICSTATE to imitate the motion; LOGICSTATE=1: motion detected and LOGICSTATE=0: motion not detected. If the sensor detects motion, the LED light will turn ON, and serial will print out motion detected at xxx sec”. If no movement detected < 5 seconds, the LED light will turn OFF. If no movement detected > 5 seconds, the serial will print out “motion ended at xxx sec”.

Copyright The Author(s) 2023.This is an Open Access Article distributed under the CC BY license. (http://creativecommons.org/licenses/by/4.0/)

Journal of Energy Engineering and Thermodynamics
ISSN: 2815-0945
Vol: 03, No. 06, Oct-Nov 2023
http://journal.hmjournals.com/index.php/JEET
DOI: https://doi.org/10.55529/jeet.36.1.12

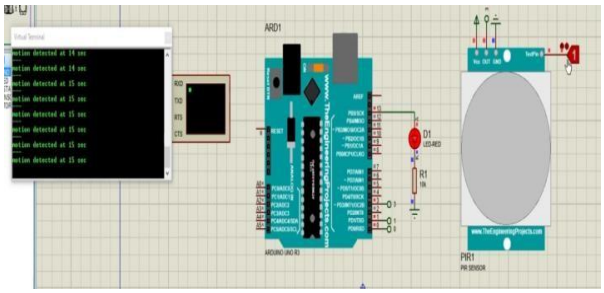

Fig 4: Simulation results

Interfacing Temperature and Humidity Sensor to Arduino

The below figure shows the schematic of Temperature and Humidity sensor interfaced with Arduino UNO along with a virtual terminal and logic state components in the workspace.

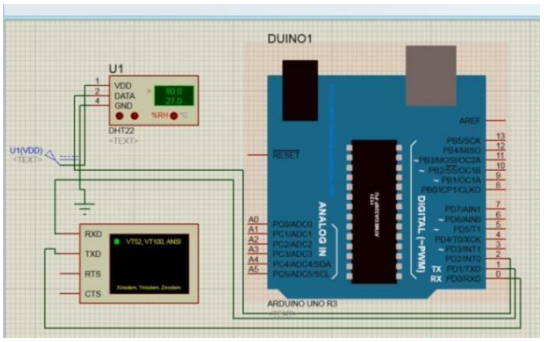

Fig 5: Interfacing Temperature and Humidity sensorto Arduino

The figures below show the results of simulation. At the start at time T1, Humidity is 80.00 and temperature is 27 degree Celsius (fig 6a). After certain time at time T2, Humidity is 80.3 and temperature is 28.3 degree Celsius (fig 6b).

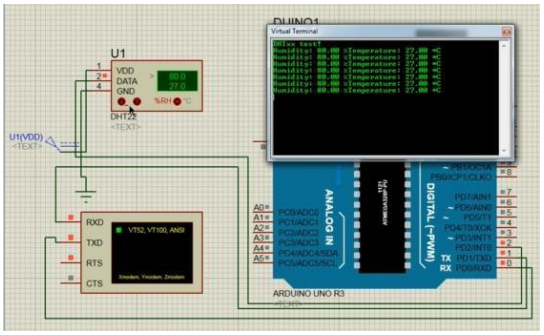

Fig 6a: Simulation results at T1

Copyright The Author(s) 2023.This is an Open Access Article distributed under the CC BY license. (http://creativecommons.org/licenses/by/4.0/)

Journal of Energy Engineering and Thermodynamics
ISSN: 2815-0945
Vol: 03, No. 06, Oct-Nov 2023
http://journal.hmjournals.com/index.php/JEET
DOI: https://doi.org/10.55529/jeet.36.1.12

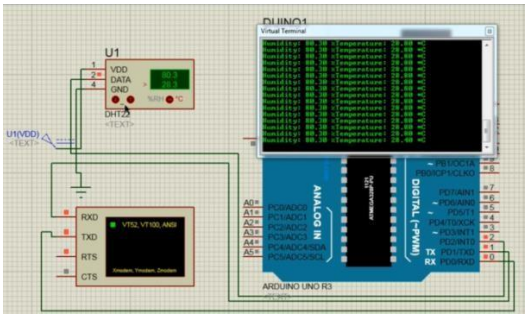

Fig 6b: Simulation results at T2

Interfacing Relay to Arduino

The below figure shows the simulation of relay circuit interfaced with Arduino UNO along with a lamp and voltage source in the workspace. In this case, relay is used to control the lamp. HIGH and LOW are sent to relay after every 1 second. Hence, the lamp turns ON and OFF after every 1 second. Fig 7a shows the lamp turned ON at time T1 second and fig 7b shows the lamp turned OFF at time T1+1 second.

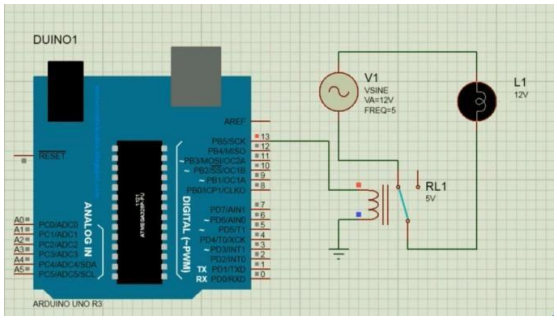

Fig 7a: Lamp ON

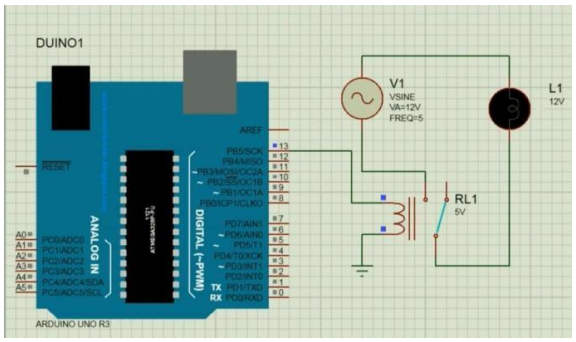

Fig 7b: Lamp OFF

Interfacing Temperature Sensorand Fan (Motor) to Arduino

In this section, the fan is used to control the humidity in the room (for convenience, a DC motor is used as a fan). If the humidity rises to 75 percent and above, the fan turns, when the humidity falls below 75 percent, the fan will turn off to the motor and Arduino UNO' in the diagram. The simulation of the connected temperature sensor and virtual terminals in the

Copyright The Author(s) 2023.This is an Open Access Article distributed under the CC BY license. (http://creativecommons.org/licenses/by/4.0/)

Journal of Energy Engineering and Thermodynamics
ISSN: 2815-0945
Vol: 03, No. 06, Oct-Nov 2023
http://journal.hmjournals.com/index.php/JEET
DOI: https://doi.org/10.55529/jeet.36.1.12

workplace is shown.

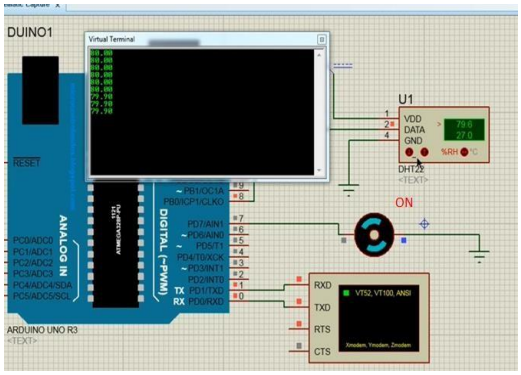

Fig 8a: Fan ON

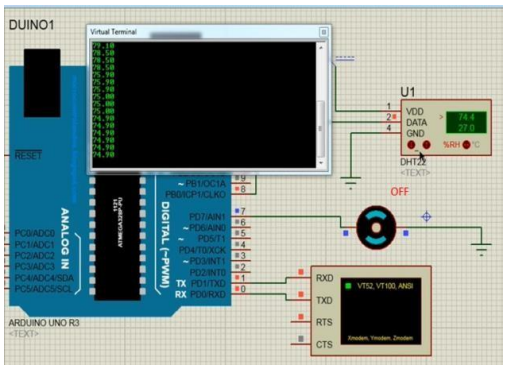

Fig 8b: Fan OFF

Final Interfacing of Entire Circuit

This section shows the final simulation of the entire circuit interfaced with Arduino UNO, PIR sensor, Temperature sensor, along with a lamp and motor(fan) in the workspace. Figure below shows the simulation results when a person enters the specified area, i.e. when PIR sensor is triggered, lamp and fan is turned ON through relay circuitry. Current temperature is also displayed. In case of the figure below, temperature is 79 degree Celsius.

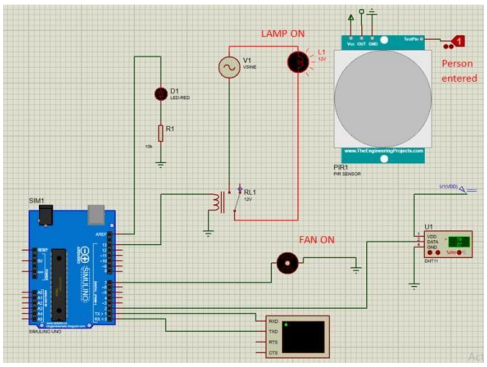

Fig 9: System when person enters the area.

Copyright The Author(s) 2023.This is an Open Access Article distributed under the CC BY license. (http://creativecommons.org/licenses/by/4.0/)

Journal of Energy Engineering and Thermodynamics
ISSN: 2815-0945
Vol: 03, No. 06, Oct-Nov 2023
http://journal.hmjournals.com/index.php/JEET
DOI: https://doi.org/10.55529/jeet.36.1.12

Figure below shows the simulation results when a person leaves the specified area, lamp and fan is turned OFF through relay circuitry. Current temperature is also displayed. In case of the figure below, temperature is 70 degree Celsius.

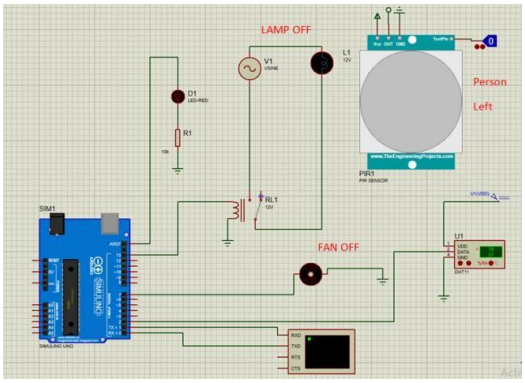

Fig 10: System when person leaves the area

Hardware Results

Results of Interfaced Components.

After the simulation results are obtained, the same has been verified with the components in Arduino IDE. The Arduino software (IDE) is a open source software, allows to write and upload code to Arduino boards. The hardware used is Arduino UNO, PIR sensor, DHT22 temperature and humidity sensor, relay, IR led transmitter, IR receiver, air conditioner, bulb and male- female wires. IR receiver connected to Arduino is used to record the code sent by the air conditioner remote to Arduino when it is turned ON and OFF. This raw data generated is used in the code. The system is programmed in such a way that if the PIR sensor is triggered, it will check for the current temperature in the defined space. If the temperature is above 29 degree Celsius then the AC (switch 1) is turned OFF or else it remains ON. Similarly, the bulb (switch 2) is turned ON and OFF when the person enters and leaves the room respectively. The figure below shows the PIR sensor triggering depending on entry and exit of the person (fig 11). Plot has been made for triggering time in minute's v/s sensor units. During the 3rd minute, PIR sensor is raised from low to high indicating the person has entered the specified area and then during the 5th minute, PIR sensor is again raised from low to high indicating the person has left the area.

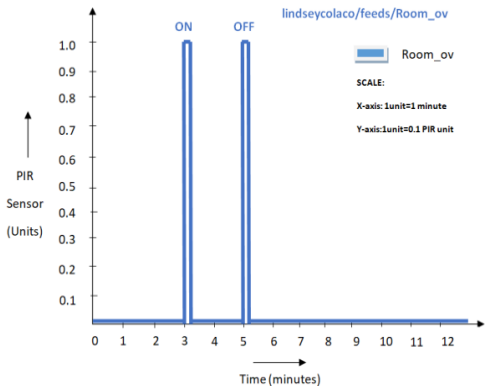

Fig 11: Plot of PIR sensor response in time

Copyright The Author(s) 2023.This is an Open Access Article distributed under the CC BY license. (http://creativecommons.org/licenses/by/4.0/)

Journal of Energy Engineering and Thermodynamics
ISSN: 2815-0945
Vol: 03, No. 06, Oct-Nov 2023
http://journal.hmjournals.com/index.php/JEET
DOI: https://doi.org/10.55529/jeet.36.1.12

The figure below shows the turning ON/OFF the bulb (switch 1) depending on PIR sensor inputs (fig 12). Plot has been made for the time bulb changes its state (in minutes) v/s bulb units. During the 3rd minute, when PIR triggers indicating person has entered the room, the bulb is switched ON, hence the change in state (low to high) has occurred. After 5th minute when the person leaves the area, PIR triggers again indicating person has left the room and the bulb is switched OFF indicated by state change (high to low).

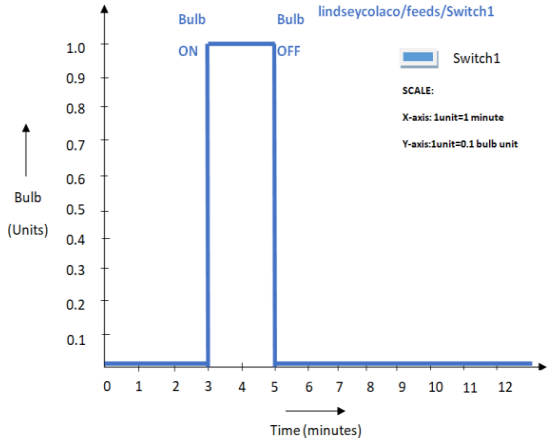

Fig 12: Plot of Bulb (switch 1) response in time

The figure below shows the turning ON/OFF the Air conditioner (switch 2) depending on PIR sensor inputs and the current temperature/humidity (fig 13). Plot has been made for the time AC changes its state (in minutes) v/s AC units. During the 3rd minute, when PIR triggers indicating person has entered the room, the AC is switched ON, hence the change in state (low to high) has occurred. After 5th minute when the person leaves the area, PIR triggers again indicating person has left the room and the AC is switched OFF indicated by state change (high to low).

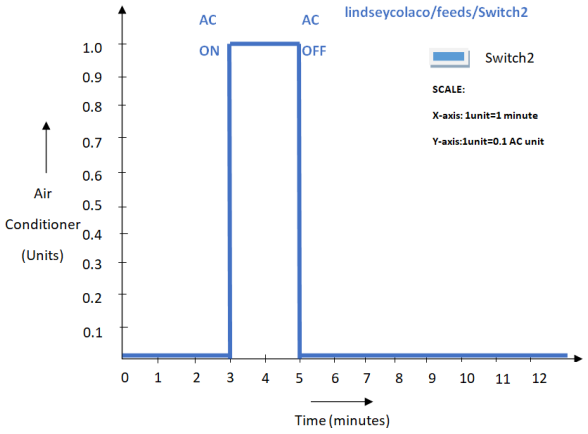

Fig 13: Plot of Air Conditioner (switch 2) response intime

The figure below shows the turning ON/OFF the AC remote depending on PIR sensor inputs (fig 14). Plot has been made for the time AC remote changes its state (in minutes) v/s AC

Copyright The Author(s) 2023.This is an Open Access Article distributed under the CC BY license. (http://creativecommons.org/licenses/by/4.0/)

Journal of Energy Engineering and Thermodynamics
ISSN: 2815-0945
Vol: 03, No. 06, Oct-Nov 2023
http://journal.hmjournals.com/index.php/JEET
DOI: https://doi.org/10.55529/jeet.36.1.12

remote units. During the 3rd minute, when PIR triggers indicating person has entered the room, the AC remote isswitched ON, hence the change in state has occurred (low to high). After 20th minute when the person leaves the area, PIR triggers again indicating person has left the room and the AC remote isswitched OFF indicated by state change (high to low).

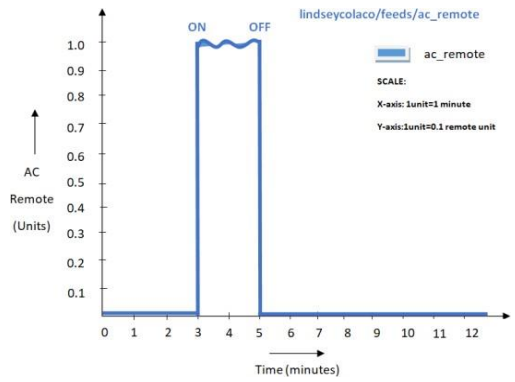

Fig 14: Plot of Air Conditioner remote response intime

The figure below shows the temperature (fig 15) and humidity (fig 16) of the defined area when PIR sensor istriggered. Plot has been made for the time temperature/humidity is noted (in minutes) v/s temperature (Celsius)/humidity(percentage). The values are displayed for 3rdto 5th minute when the movement takes place where Arduino receives signal from PIR saying the person has entered/left the room.

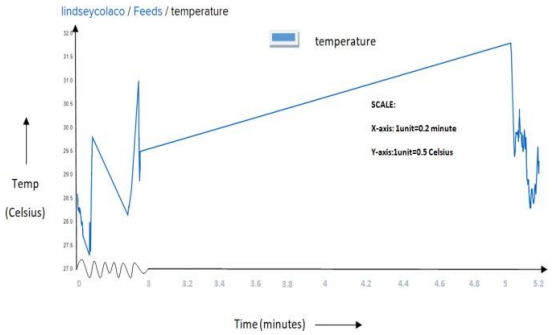

Fig 15: Plot of current temperature in time

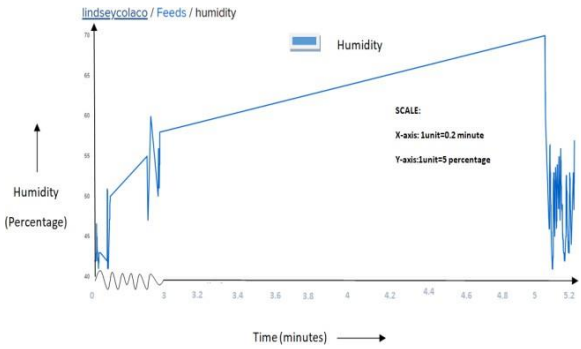

Fig 16: Plot of current humidity in time

Copyright The Author(s) 2023.This is an Open Access Article distributed under the CC BY license. (http://creativecommons.org/licenses/by/4.0/)

Journal of Energy Engineering and Thermodynamics
ISSN: 2815-0945
Vol: 03, No. 06, Oct-Nov 2023
http://journal.hmjournals.com/index.php/JEET
DOI: https://doi.org/10.55529/jeet.36.1.12

Results of Adafruit Io.

The entire system has been made IOT enabled where one can monitor these appliances and manually turn ON/OFF the switches as per convenience. Adafruit IO cloud service is used where one can connect to it over the internet and primarily store and retrieve data by connecting to the components. Figure below shows the dashboard of Adafruit service while the system is turned ON/OFF. Fig 17 displays the system dashboard when person enters the room, indicating the room has been occupied thereby turning the lights and AC's ON. Current room temperature and humidity is displayed too. User is also given the option to manually turn OFF the system according to its need.

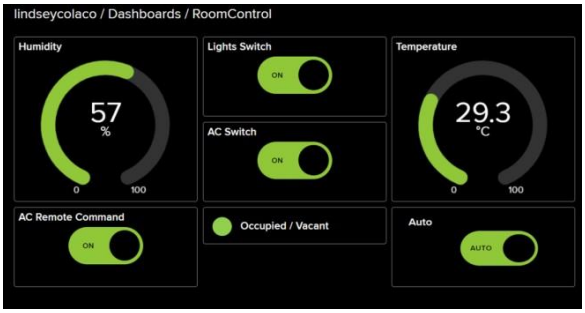

Fig 17: Adafruit IO Dashboard for an occupied room.

Fig 18 displays the system dashboard when person leaves the room, indicating the room has been vacant thereby turning the lights and AC's OFF. Current room temperature and humidity is displayed too. User is also given the option to manually turn ON the system according to its need.

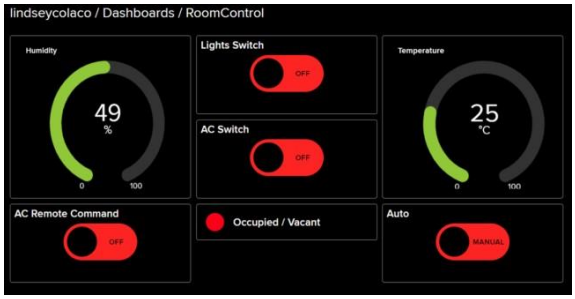

Fig 18: Adafruit IO Dashboard for a vacant room.

4. CONCLUSION AND FUTURE WORK

This article presents an energy-efficient, easy-to- install, wireless and low-cost IoT-based smart office lighting system that is ideal for installation in offices of large companies or factories. It uses an infrared human body motion sensor (PIR sensor) to work with other sensors; only when there is no one in the room, all the lights and air conditioners in the room will go into low light mode together, that is, they will turn off. species, otherwise all are species. The system can easily realize energy saving and easy control of LED lighting. Moreover, the cost of this system is only 1/10 of the smart light installation and the original LED lamps do not need to be replaced. Existing equipment can be used in the system without

Copyright The Author(s) 2023.This is an Open Access Article distributed under the CC BY license. (http://creativecommons.org/licenses/by/4.0/)

Journal of Energy Engineering and Thermodynamics
ISSN: 2815-0945
Vol: 03, No. 06, Oct-Nov 2023
http://journal.hmjournals.com/index.php/JEET
DOI: https://doi.org/10.55529/jeet.36.1.12

requiring any plug-in or server installation. In this study, small, cheap and powerful Arduino microcontroller was used. This microcontroller is wireless capable and can be used to communicate between devices and servers.

The system has been designed with a focus on saving energy, reducing costs, increasing security and facilitating the management of future systems. In addition, we plan to focus our future work on determining the quality of natural light to improve energy savings and improve energy efficiency. We can also send text messages or email alerts when events occur, such as a light situation or someone breaking into a room. The brightness of the light in the room should be adjusted according to the weather. When it's sunny, the light should be set to low brightness, and when it's cloudy, the light should be set to high.

5. REFERENCES

1. J. Byun and T. Shin, ''Design and implementation of an energy saving lighting control system considering user satisfaction,'' IEEE Trans. Consum. Electron, vol. 64, no. 1, pp. 61–68, Feb. 2018, doi: 10.1109/TCE.2018.2812061.
2. R. Perkasa, R. Wahyuni, R. Melyanti, H. Herianto, and Y. Irawan, ''Light control using human body temperature based on Arduino Uno and PIR (passive infrared receiver) sensor,'' J. Robot. Control, vol. 2, no. 4, pp. 307–310, 2021, doi: 10.18196/jrc.2497.
3. U. Lestari, E. Fatkhiyah, and A. F. Prakoso, ''Application of home light control system using Arduino with mobile based Wi-Fi media,'' Int. J. Inf. Syst. Comput. Sci., vol. 2, pp. 67–75, Jan. 2019.
4. C. Bae, J. Yoo, K. Kang, Y. Choe, and J. Lee, ''Home server for home digital service environments,'' IEEE Trans. Consum. Electron, vol. 49, no. 4, pp. 1129–1135, Nov. 2003.
5. C.-H. Lien, C.-H. Lin, Y.-W. Bai, M.-F. Liu and M.- B. Lin,''Remotely controllable outlet system for home power management,'' in Proc. IEEE Int. Symp. Consum. Electron, Jun. 2006, pp. 7–12.
6. A. Alheraish, ''Design and implementation of home automation system,'' IEEE Trans. Consum. Electron, vol. 50, no. 4, pp. 1087–1092, Nov. 2004.
7. R. R. Mohamed, M. A. Mohamed, K. Azmi, E. Rao, and W. Hashim, ''Indoor smart lighting controlling using human detection,'' Int. J. Adv. Trends in Comput. Sci. Eng., vol. 9, no. 1, pp. 566–570, 2020.
8. U. Ramachandraiah thiab K. Venkatesan, "Adaptive automation and run-time synchronization with real- time monitoring of split air conditioners in tele- com applications to increase Zog efficiency", International Conference on Robotics, Automation, Control and Embedded Systems (RACE), Nrias teb, 2015.
9. W. Song, N. Feng, Y. Tian, and S. Fong, "IoT-Based Intelligent Control System of Air Conditioner for High Energy Efficiency" presented at the IEEE International Internet Expo. Things (iThings) Conference and IEEEGreen Computing and Communications (GreenCom) and IEEE Computing in Networks, Physical and Society (CPSCom) and IEEE Smart Data (SmartData), Exeter, UK, 2017.

Copyright The Author(s) 2023.This is an Open Access Article distributed under the CC BY license. (http://creativecommons.org/licenses/by/4.0/)