Journal of Energy Engineering and Thermodynamics
ISSN: 2815-0945
Vol: 02, No. 04, June-July 2022
http://journal.hmjournals.com/index.php/JEET
DOI: https://doi.org/10.55529/jeet.24.36.45

Modelling and Control of SEPIC and BIDC Converter Based off-Board EV Battery Charger using PV Array

R. Kalyan[1*], M. Venkata Subbaiah[2], B. Sai Charan[3], K. Meenendranath Reddy[4], Dr. P. Sankar Babu[5]

[1,2,3]Student, Dept of EEE, SVR Engineering College, Nandyal. India*
[4]Assistant Professor, Dept of EEE, SVR Engineering College, Nandyal. India
[5]Professor & HOD, Dept of EEE, SVR Engineering College, Nandyal. India

Corresponding Email: [*]majjarisubbaiah26@gmail.com

Received: 03 April 2022 **Accepted:** 22 June 2022 **Published:** 30 July 2022

Abstract: ***Recent years have seen a dramatic increase in the usage of renewable energy sources in a variety of industries, including the automotive sector where it plays a role in charging the batteries of electric vehicles (EVs). Here, we present a method for lightweight EVs that uses a solar energy power conversion with SEPIC and bidirectional interleaved DC-DC converter (BIDC) to charge their batteries from the grid instead of on-board. The suggested technology can recharge the electric vehicle's battery throughout daylight and nighttime hours. The EV battery and the backup battery both get charged during peak sunlight hours, and the backup battery helps charge the EV battery when the sun isn't out. In order to test the effectiveness of the proposed charging method, a simulation was run in the MATLAB software using the Simulink application.***

Keywords: ***Electric Vehicles (Evs), PV Array, Battery Charger, SEPIC, BIDC, Off-Board Charger.***

1. INTRODUCTION

As the number of people driving electric vehicles continues to rise, so does the demand for convenient charging stations. To reduce the time spent charging, DC off-board chargers are the way to go. Several modern cars can acquire an 80% charge in under an hour using standard DC fast chargers; however, this is highly dependant on the battery capacity. As a result of the reduced charging time, drivers may top off their batteries throughout the day or on a brief break instead of having to leave their vehicles plugged in overnight. To keep up, the output of DC chargers has been increasing, and some may currently reach 350 kW. In order to provide the right voltage and current to the battery, off-board chargers must coordinate with the vehicle. Most public charging points employ non-dedicated connectors, which means they must be compatible with a wide range of battery voltages and chemistries.

Copyright The Author(s) 2022.This is an Open Access Article distributed under the CC BY license. (http://creativecommons.org/licenses/by/4.0/)

Journal of Energy Engineering and Thermodynamics
ISSN: 2815-0945
Vol: 02, No. 04, June-July 2022
http://journal.hmjournals.com/index.php/JEET
DOI: https://doi.org/10.55529/jeet.24.36.45

The quantity of harmonic and dc current injected into the utility grid by the battery charger must be kept under the specified limit, and the charger itself should be developed in accordance with standards like IEEE-1547 and SAE-J2894.

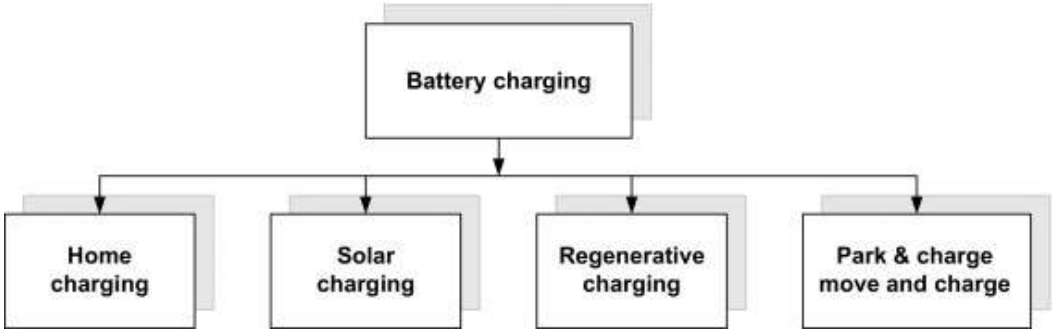

Fig.1: Different charging schemes.

Powering the wheels of EVs is a robust, high-power, high-energy battery pack. As traditional EVs must plug into the grid to replenish their batteries, they are only counted as a burden on the power system. To a considerable extent, the charging procedure is simplified by one-way battery chargers that only allow only one direction of power flow, specifically Grid-to-Vehicle (G2V) charging. The SAE standards for charging power levels are listed in Table of the Appendices. These standards are extensively used in the United States.

Table.1: Different standard power levels.

AC level 1	DC level 1
Single-phase, 120 V, 16 A, 1.9 kW (max)	200–450 V, 80 A, 36 kW (max)
AC level 2	DC level 2
Single-phase, 240 V, 80 A, 19.2 kW (max)	200–450 V, 200 A, 90 kW (max)
AC level 3	DC level 3
Single-phase or 3-phase, > 20 kW	200–600 V, 400 A, 240 kW (max)

The battery charger of an EV can be either on-board or off-board, based on where it is located. It takes an extended period for the battery to fully charge because the onboard charger has a slow charging rate (typically 5–8 h for full charge). The on-board charger must be small and lightweight (usually less than 5 kg) due to the EV's restricted payload and storage capacity. Nevertheless, the off-board charger may be of any size or weight because it is not physically attached to the vehicle. The bidirectional interleaved DC-DC converter (BIDC) is favoured over other non-isolated bidirectional circuit topologies because of its many benefits, including its maximum reliability in the form of discontinuous conduction, its low inductance amount, and its low ripple current, all of which are the result of the multiphase interleaving strategy. By placing a snubber capacitor between the switches, the turnoff losses are minimised, and the intrinsic ringing impact of the inductor current is dampened. These are some of the further benefits of this bidirectional converter. In a

Copyright The Author(s) 2022.This is an Open Access Article distributed under the CC BY license. (http://creativecommons.org/licenses/by/4.0/)

Journal of Energy Engineering and Thermodynamics
ISSN: 2815-0945
Vol: 02, No. 04, June-July 2022
http://journal.hmjournals.com/index.php/JEET
DOI: https://doi.org/10.55529/jeet.24.36.45

stationary position, the PV array powers a bidirectional DC-DC converter, which in turn charges the EV battery; in motion, the EV battery is discharged to power the vehicle's dc load. The downside is that the battery in your EV can only be charged during daylight hours. The suggested charger uses a PV array combined with a sepic converter, a bidirectional DC-DC converter, and a backup battery bank to counteract this shortcoming and ensure the EV battery is always being charged.

Ev Charging System

The function of charging devices in the widespread adoption of EVs is crucial. Features of charging devices are directly related to battery performance & overall charging system. Low size and weight, maximum dependability & efficiency, maximum power efficiency, & least cost are all desirable qualities in a battery charger. There are a variety of charging methods, parts, and management links that must all work together for a battery charger to function. EV chargers necessitate utility current with low losses and a greater power factor to mitigate the effects of poor power quality & boost effective output. Simply said, there are three types of chargers: those installed on the vehicle, those located off the vehicle, and those that use wireless technology (refer to Fig.2). One-phase or three-phase electricity may power any charging system, and each charging system can be either unidirectional or bidirectional. Off-board charging solutions often require three-phase electricity due to their greater power ratings.

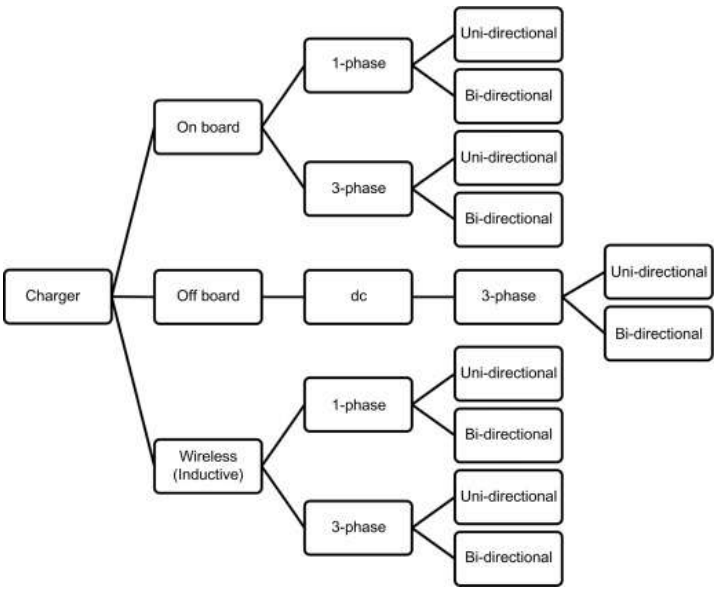

Fig.2: Types of chargers.

An efficient power conservation system that reduces the overall number of plug-in hybrid electric vehicles (PHEVs) charging in the quickest infrastructure possible by making use of an additional super capacitor and flywheel. In addition, employed two batteries ranging in capacity from 10 kwh to 15 kwh to demonstrate that the new framework of the computational methods requires only around 15 minutes to charge from a minimal state of charge of 20 percent to an optimal level of 95 kwh (Fig. 3).

Copyright The Author(s) 2022.This is an Open Access Article distributed under the CC BY license. (http://creativecommons.org/licenses/by/4.0/)

Journal of Energy Engineering and Thermodynamics
ISSN: 2815-0945
Vol: 02, No. 04, June-July 2022
http://journal.hmjournals.com/index.php/JEET
DOI: https://doi.org/10.55529/jeet.24.36.45

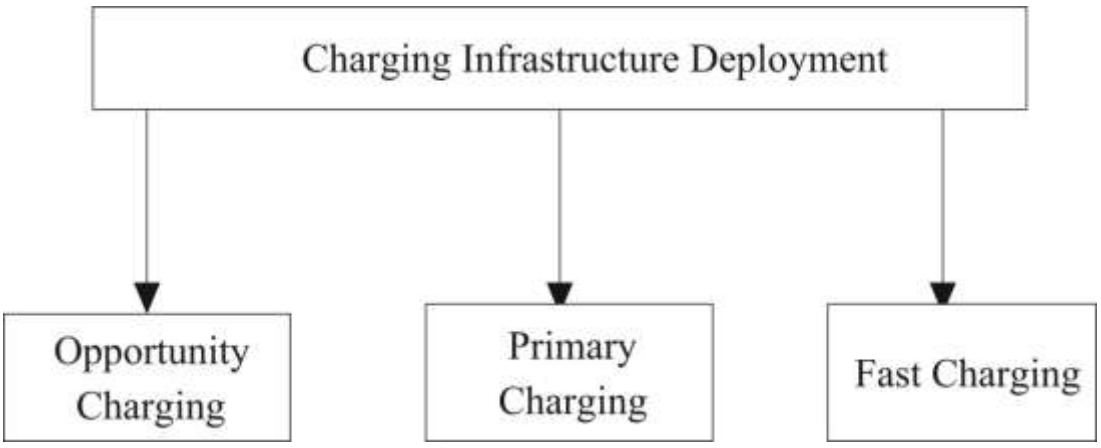

Fig.3: Charging system structure.

There are a number of different battery charging configuration options available, including a standalone PV-EV battery charging system and a universal battery charging system.

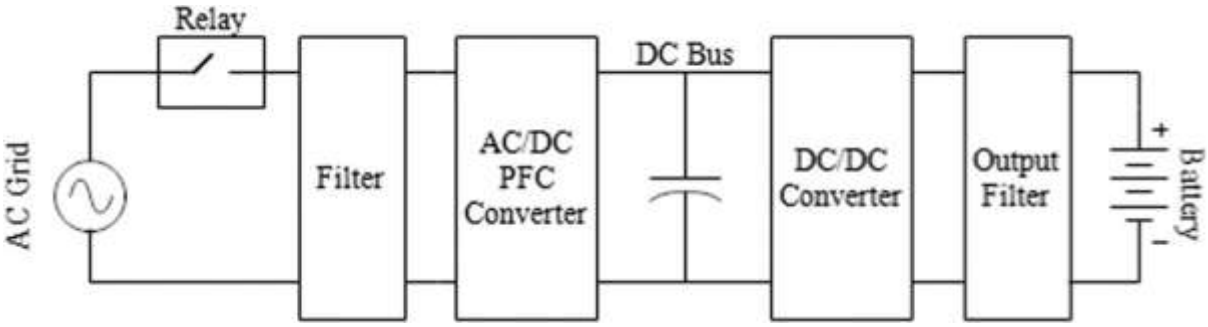

Fig.4: Conventional charging system

Using the electricity from the grid system is the standard method of charging batteries, as seen in Fig. 4. Instead to using grid power, RES can be used to charge the EV's battery. One of the off-board chargers used to charge the battery without tapping into the grid is the PV stand-alone system seen in Fig. 5. The sun's rays aren't always strong enough to power the system, thus a backup battery bank is required. When there is a lack of sunlight, the EV's battery may be charged using the surplus electricity stored in the backup battery. If you exclude the secondary battery, this setup can function as an on-board charger.

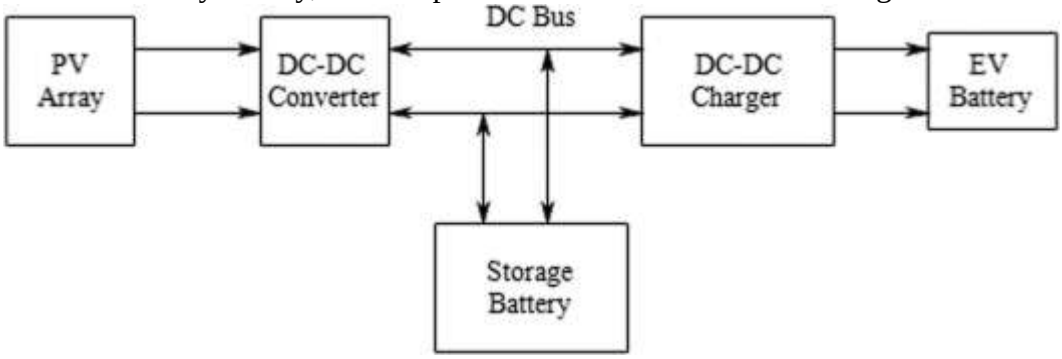

Fig.5: PV-EV charging system.

Copyright The Author(s) 2022.This is an Open Access Article distributed under the CC BY license. (http://creativecommons.org/licenses/by/4.0/)

Journal of Energy Engineering and Thermodynamics
ISSN: 2815-0945
Vol: 02, No. 04, June-July 2022
http://journal.hmjournals.com/index.php/JEET
DOI: https://doi.org/10.55529/jeet.24.36.45

2. SIMULATION RESULTS

For the simulation analyses of the new methodology, we employ Simulink in MATLAB.

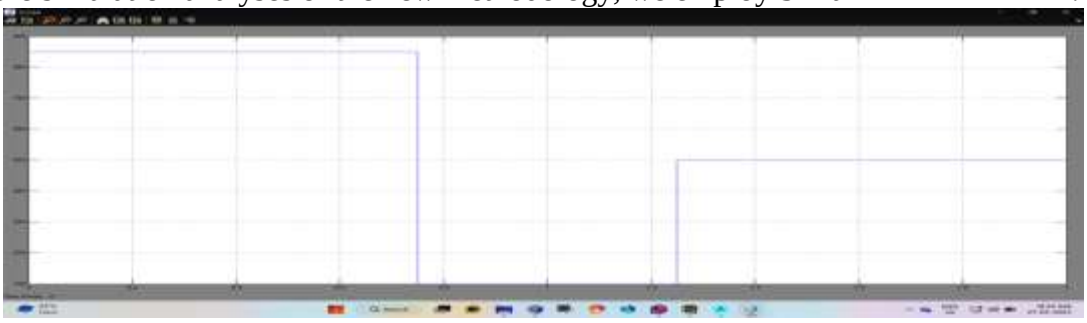

Irradiance

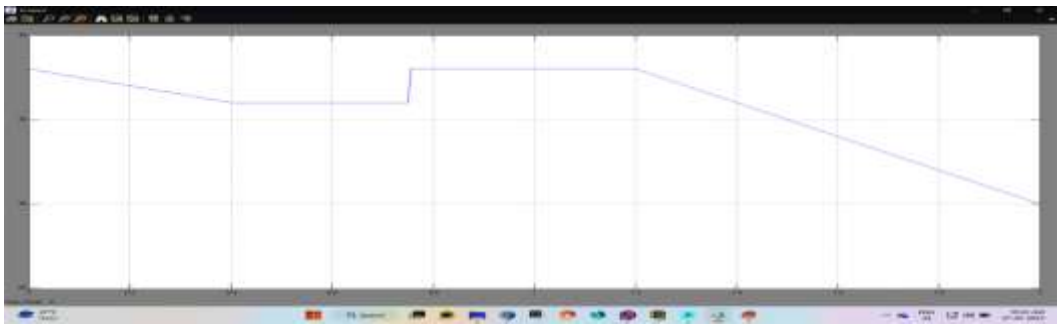

PV Array voltage (Vpv)



PV Array Current (Ipv)

Fig:(a) simulation waveforms of PV array



Copyright The Author(s) 2022.This is an Open Access Article distributed under the CC BY license. (http://creativecommons.org/licenses/by/4.0/)

Journal of Energy Engineering and Thermodynamics
ISSN: 2815-0945
Vol: 02, No. 04, June-July 2022
http://journal.hmjournals.com/index.php/JEET
DOI: https://doi.org/10.55529/jeet.24.36.45

SOC of EV Battery

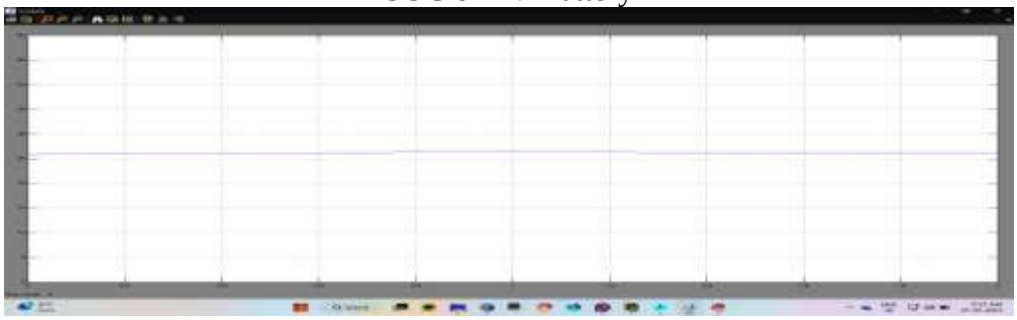

EV battery voltage (Vb)



EV battery current (Ib)

Fig:(b) simulation waveforms of EV battery

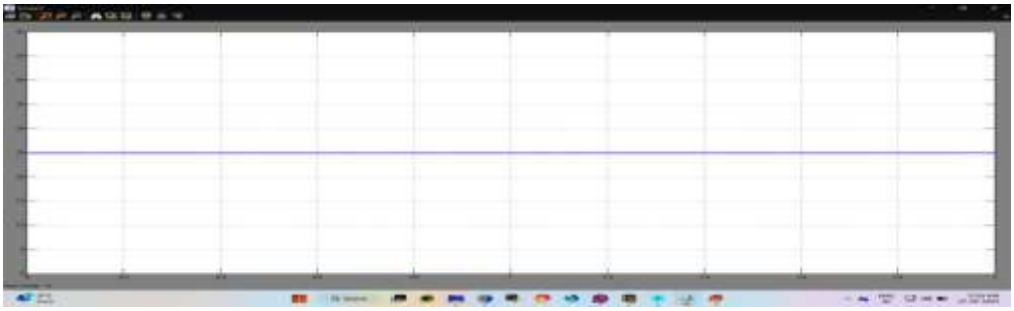

Vdc



Idc

Fig:(c) simulation waveforms of DC link.

Copyright The Author(s) 2022.This is an Open Access Article distributed under the CC BY license. (http://creativecommons.org/licenses/by/4.0/)

Journal of Energy Engineering and Thermodynamics
ISSN: 2815-0945
Vol: 02, No. 04, June-July 2022
http://journal.hmjournals.com/index.php/JEET
DOI: https://doi.org/10.55529/jeet.24.36.45

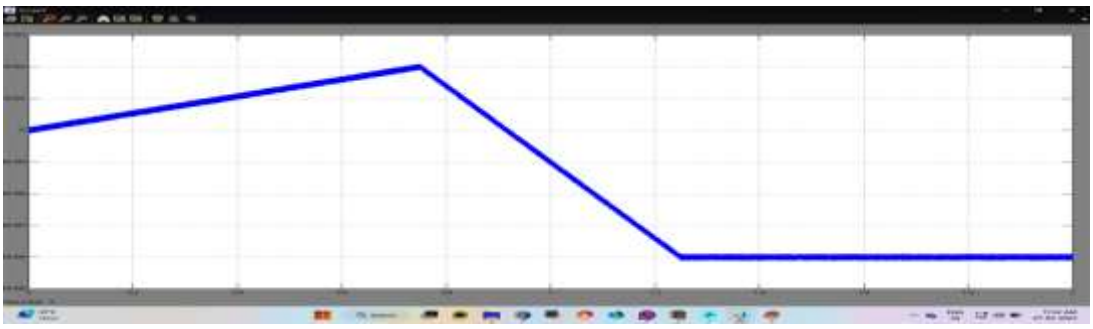

SOC battery

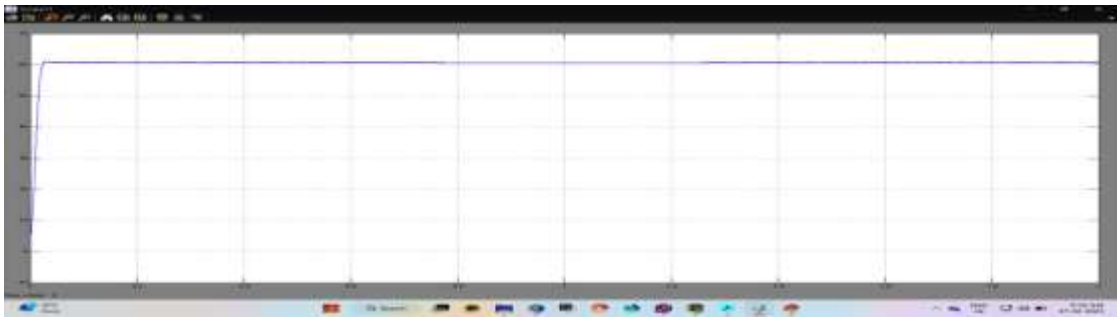

Battery voltage (Vbatt)

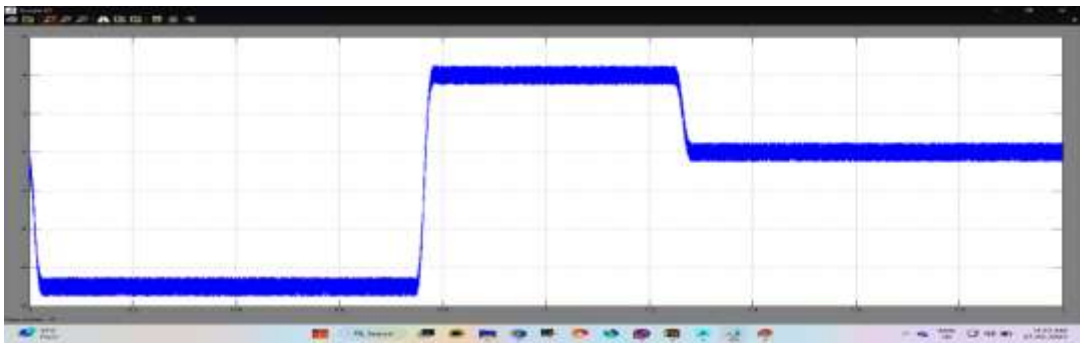

Battery current (Ibatt)
Fig:(d) simulation waveforms of battery.
Fig.6: waveforms of proposed system

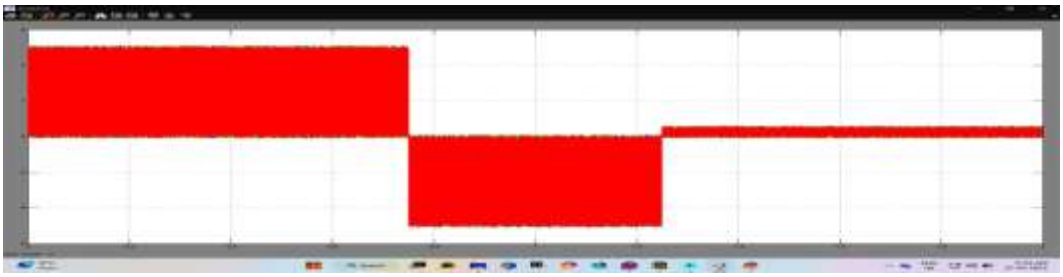

Fig.7: BIDC inductor currents.

Dynamic patterns of the PV array, dc link, EV battery, and backup battery were shown for different irradiation values in Fig. 6. Using the sepic converter, the 33.3 V PV array voltage

Copyright The Author(s) 2022.This is an Open Access Article distributed under the CC BY license. (http://creativecommons.org/licenses/by/4.0/)

Journal of Energy Engineering and Thermodynamics
ISSN: 2815-0945
Vol: 02, No. 04, June-July 2022
http://journal.hmjournals.com/index.php/JEET
DOI: https://doi.org/10.55529/jeet.24.36.45

(VPV) is reduced to the 28 V dc link voltage (Vdc) in mode 1. This is seen in Figs. 6a and b. Fig. 6b shows that when the EV battery's state of charge (SOC) rises, the negative current flowing through it increases. During this mode, the BIDC acts as a boost converter in the forward direction, increasing the dc link voltage, Vdc, from 28 to 60.6 V in order to charge the backup battery while maintaining a constant SOC (see Fig. 6d). Figure.6a shows the voltage and current waveforms of a PV array in mode 2 (during non-sunny hours and low irradiation circumstances), with VPV increasing to its open circuit voltage of 37.25 V and IPV being 0 A. As can be seen in Fig. 6b, the BIDC switches into buck mode in the opposite direction at this time, reducing the voltage from the secondary battery to 27.32 V in order to charge the EV's battery. Fig. 6d shows that the backup battery is being depleted by a positive current and a falling SOC. As shown in Fig. 6d, the voltage of the backup battery drops from 60.6 V to 55.2 V when this mode concludes. Figures 6a and 6c depict how the PV array voltage, VPV, is reduced to the dc link voltage, Vdc, of 27.6 V in mode 3 to charge the EV battery. Even in this mode, the EV battery's state of charge (SOC) is rising and the current is negative, showing that the battery is being charged. As illustrated in Fig. 6d, the backup battery's voltage stays at 55.2 V even if its current drops to zero while in mode 3, which occurs when the battery is disconnected from the charging system. In all three modes depicted in Fig. 6b, the EV battery is continually being charged, either by the PV array or the backup battery, while the SOC of the EV battery rises and the current decreases. If you look at Fig. 7, you can see the overlapping waveforms of the currents flowing through the BIDC's inductors throughout all of its different modes of operation. While the inductor current flows backwards in mode 2, the backup battery is being depleted, and in mode 3, the BIDC is no longer connected to the charger, it is easy to see that the inductor is not receiving any power.

3. CONCLUSION

This paper proposes a PV-module-fed, SEPIC-and-BIDC-equipped off-board EV battery charging system for lightweight EVs. Examining the current state, most recent deployment, and difficult difficulties in implementing EV infrastructure, charging power levels, in conjunction with numerous charging power topologies, this article also examines the societal consequences and future prospects of EVs. As charging infrastructure and charger characteristics continue to evolve, so too must the parameters for evaluating battery performance in electric vehicles. This paper explains how the system may be adjusted to both charge the EV's battery while the vehicle is idling and drive the motor while the vehicle is in motion. Simulink, a component of MATLAB, is used for both system design and simulation.

4. REFERENCES

1. Z. Darabi and M. Ferdowsi, “Aggregated impact of plug-in hybrid electric vehicles on electricity demand profile,” IEEE Trans. Sustain. Energy, 2(4): (2011) 501–508.
2. S. Rezaee, E. Farjah, B. Khorramdel, “Probabilistic Analysis of Plug- In Electric Vehicles Impact on Electrical Grid Through Homes and Parking Lots," Sustainable Energy, IEEE Transactions on, 4(4): (2013) 1024-1033.
3. M.F. M. Sabri, K.A. Danapalasingam, M.F. Rahmat, A review on hybrid electric vehicles architecture and energy management strategies, Renewable and Sustainable

Copyright The Author(s) 2022.This is an Open Access Article distributed under the CC BY license. (http://creativecommons.org/licenses/by/4.0/)

Journal of Energy Engineering and Thermodynamics
ISSN: 2815-0945
Vol: 02, No. 04, June-July 2022
http://journal.hmjournals.com/index.php/JEET
DOI: https://doi.org/10.55529/jeet.24.36.45

Energy Reviews, Volume 53, January 2016, Pages 1433-1442, ISSN 1364-0321, http://dx.doi.org/10.1016/j.rser.2015.09.036.

4. J. Larminie and J. Lowry, *Electric Vehicle Technology Explained*. New York: Wiley, 2003.
5. Balavenkata Muni, N., Sasikumar, S., Hussain, K., Reddy, K.M. (2022). A Progressive Approach of Designing and Analysis of Solar and Wind Stations Integrated with the Grid Connected Systems. In: Kalinathan, L., R., P., Kanmani, M., S., M. (eds) Computational Intelligence in Data Science. ICCIDS 2022. IFIP Advances in Information and Communication Technology, vol 654. Springer, Cham. https://doi.org/10.1007/978-3-031-16364-7_7.
6. K.MEENENDRANATH REDDY, & SYED RESHMA. (2022). A Comparative Analysis of Integrated DC Microgrid with Hybrid Power Generation Systems by an Intelligent Control Strategy. International Journal of Recent Research in Electrical and Electronics Engineering, 9(2), 1–10. https://doi.org/10.5281/zenodo.6538769.
7. Sharabu. Siddhartha Achari, Galigeri. Aravindakumar, Ketha. Govardhan and K.Meenendranath Reddy. Wireless Electrical Power Transmission Using Spark Gap Tesla Coil (SGTC). International Journal for Modern Trends in Science and Technology 2022, 8(07), pp. 38-50. https://doi.org/10.46501/IJMTST0807007.
8. K.Meenendranath Reddy, G.Hussain Basha, Saggi Raj Kumar, V.Srikanth. An Efficient MPPT Technique using Fuzzy/P&O Controller for PV Applications. International Journal for Modern Trends in Science and Technology 2021, 7, pp. 106-111. https://doi.org/10.46501/IJMTST0710017.
9. Dr. P.Sankar Babu, K.Meenendranath Reddy and S.Sneha Madhuri. Improvement of Power Quality in Renewable Energy Integrated Microgrid System Using CMBC. International Journal for Modern Trends in Science and Technology 2021, 7 pp. 299-303. https://doi.org/10.46501/IJMTST0712058.
10. Kavitha, K., K. Meenendranath Reddy, and Dr. P.Sankar Babu. 2022. "An Improvement of Power Control Method in Microgrid Based PV-Wind Integration of Renewable Energy Sources". Journal of Energy Engineering and Thermodynamics(JEET) ISSN 2815-0945 2 (06):18-28.
11. P. Naga Sai Charan, & K. Meenendranath Reddy. (2023). An Analysis of Multilevel Converter for Faster Current Control in a DC Microgrid with Extremely Low-Impedance Interconnections. Journal of Image Processing and Intelligent Remote Sensing(JIPIRS) ISSN 2815-0953, 3(01), 18–29. https://doi.org/10.55529/jipirs.31.18.29.
12. Madhuri. N. S, K. Meenendranath Reddy, G. Venkata Suresh Babu, 2014, The Optimal Sizing and Placement of Renewable Distributed Generation In Distribution System, INTERNATIONAL JOURNAL OF ENGINEERING RESEARCH & TECHNOLOGY (IJERT) Volume 03, Issue 10 (October 2014).
13. S. Madan Gopal, & K. Meenendranath Reddy. (2023). Design and Control of High Voltage Gain Interleaved Boost Converter for Fuel Cell Based Electric Vehicle Applications. Journal of Electronics,Computer Networking and Applied Mathematics(JECNAM) ISSN : 2799-1156, 3(02), 9–24. https://doi.org/10.55529/jecnam.32.9.24.

Copyright The Author(s) 2022.This is an Open Access Article distributed under the CC BY license. (http://creativecommons.org/licenses/by/4.0/)

Journal of Energy Engineering and Thermodynamics
ISSN: 2815-0945
Vol: 02, No. 04, June-July 2022
http://journal.hmjournals.com/index.php/JEET
DOI: https://doi.org/10.55529/jeet.24.36.45

14. R. Roopa Sri, & K. Meenendranath Reddy. (2023). Improved Power Management Control of a Multiport Converter Based EV Charging Station with PV and Battery. International Journal of Research in Science &Amp; Engineering (IJRISE) ISSN: 2394-8299, 3(02), 16–25. https://doi.org/10.55529/ijrise.32.16.25.
15. M. Venkateswari, & K.Meenendranath Reddy. (2023). Modelling and Control of a Stand-Alone Hybrid PV-Wind Micro-Grid System. International Journal of Research in Science &Amp; Engineering (IJRISE) ISSN: 2394-8299, 3(1), 24–38. https://doi.org/10.55529/ijrise.31.24.38.
16. Balaji, A. ., & Reddy, K. M. (2023). An Interlinking Converter for Renewable Energy Integration into Hybrid Grids. Journal of Energy Engineering and Thermodynamics (JEET) ISSN 2815-0945, 3(02), 12–21. https://doi.org/10.55529/jeet.32.12.21.
17. C. J. Krishna, K. M. Reddy, and G. V. S. Babu, "A New Strategy to Control Reactive Power of a PMS Wind Generator with Matrix Converter," Jan. 2015.

Copyright The Author(s) 2022.This is an Open Access Article distributed under the CC BY license. (http://creativecommons.org/licenses/by/4.0/)