Journal of Energy Engineering and Thermodynamics
ISSN: 2815-0945
Vol: 03, No. 04, June-July 2023
http://journal.hmjournals.com/index.php/JEET
DOI: https://doi.org/10.55529/jeet.34.1.8

Design and Analysis of Vertical Axis Wind Turbine Using CFD Analysis

Raj Sharma[1*], Yash Sharma[2], Ashutosh Hathiya[3], Ram Janm Singh[4]

[1,2,3,4]Mechanical Department, Medi-caps University, India*

Email: [2]en19me301019@medicaps.ac.in, [3]en19me301005@medicapa.ac.in, [4]ramjanm.singh@medicaps.ac.in
Corresponding Email: [1]en19me301015@medicaps.ac.in*

Received: 29 January 2023 **Accepted:** 19 April 2023 **Published:** 05 June 2023

Abstract: ***The demand for renewable energy sources has made wind turbines a popular choice for generating electricity. The vertical axis wind turbine (VAWT) is an attractive option due to its compact size, easy maintenance, and ability to operate at low wind speeds. In this project, we aim to design and analyze a VAWT that can efficiently harness wind power and generate electricity. The project involves several steps, including choosing the appropriate design, selecting the materials, determining the optimal blade geometry, and testing the turbine's performance. Key considerations include wind conditions at the installation site, power output requirements, and material selection. The geometry of 2D vertical axis wind turbine is done with SolidWorks then ANSYS will be used to do fluid analysis on this 2D turbine using the sliding mesh and Ansys result will be used to generate coefficient of power vs. tip ratio diagram. We select NACA 0021 type wind turbine blade design for project.***

Keywords: ***Renewable Energy Sources, Wind Energy, Design, Materials, Blade Geometry, Computational Fluid Dynamics (CFD), Computer-Aided Design (CAD), Finite Element Analysis (FEA).***

1. INTRODUCTION

The rotor axis of vertical axis wind turbines (VAWTs) is perpendicular to the ground, making them well-suited for use in urban and residential locations where HAWTs would be impractical. Several factors must be taken into account in the design and analysis of VAWTs. These include the rotor blades' aerodynamic design, the turbine blades' form and orientation, the blades' material, the rotor's diameter, the number of blades, and the generator type.

Copyright The Author(s) 2023. This is an Open Access Article distributed under the CC BY license. (http://creativecommons.org/licenses/by/4.0/)

Journal of Energy Engineering and Thermodynamics
ISSN: 2815-0945
Vol: 03, No. 04, June-July 2023
http://journal.hmjournals.com/index.php/JEET
DOI: https://doi.org/10.55529/jeet.34.1.8

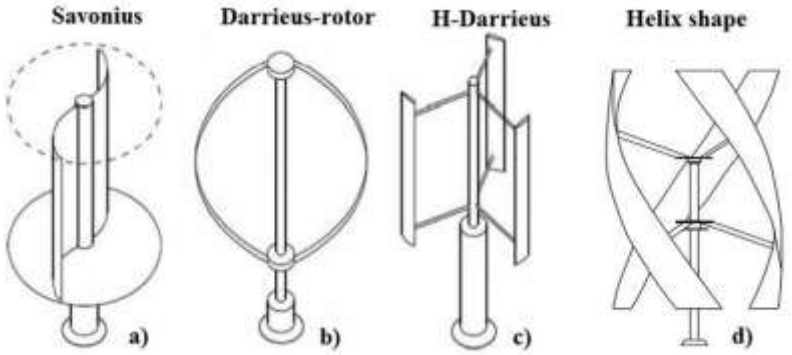

Figure: Various type of VAWT

The performance of a VAWT is influenced by various design choices and external factors such as wind speed and turbulence. Therefore, analyzing the performance of a VAWT involves simulating its performance under various wind conditions and calculating its power output. There are several analytical methods and computer simulations that can be used, including computational fluid dynamics (CFD) simulations, blade element momentum (BEM) theory, and experimental testing.

The design and analysis of VAWTs are essential for improving their efficiency and reliability, making them more competitive with HAWTs in terms of energy generation. By considering various design choices and simulating performance under different wind conditions, researchers can optimize VAWT designs to generate more energy and contribute to a more sustainable future.

Research Elaborations

Research can be done to optimize the design and performance of a 1.4 m diameter, 1.75 m height, and 7-blade savonius type vertical axis wind turbine. By analysing the aerodynamics, blade design, generator selection, and structural design, researchers can improve the efficiency and reliability of the turbine, making it a more competitive source of renewable energy.

- **Aerodynamic Design:** The aerodynamic design of the turbine is critical for its performance. The design must ensure that the blades capture the maximum amount of wind energy while minimizing turbulence and drag. Research can be done to optimize the aerodynamic design of the blades, taking into account factors such as the airfoil shape, blade twist, and chord length.

- **Blade Material:** The material of the blades needs to be strong, lightweight, and durable. Research can be done to evaluate the suitability of different materials for the blades, such as composite materials, metals, or plastics. The choice of material can affect the cost, weight, and durability of the turbine.

- **Blade Number and Configuration:** The number and configuration of the blades can impact the turbine's efficiency and stability. Research can be done to analyze the performance of the turbine with different blade configurations, such as varying the

Copyright The Author(s) 2023. This is an Open Access Article distributed under the CC BY license. (http://creativecommons.org/licenses/by/4.0/)

Journal of Energy Engineering and Thermodynamics
ISSN: 2815-0945
Vol: 03, No. 04, June-July 2023
http://journal.hmjournals.com/index.php/JEET
DOI: https://doi.org/10.55529/jeet.34.1.8

number of blades, blade angle, or blade curvature. The effects of blade configuration on power output, noise level, and stability can be investigated.

- **Rotor Diameter:** The rotor diameter is an essential factor in determining the turbine's energy output. A larger rotor diameter can capture more wind energy, but it also increases the weight and cost of the turbine. Research can be done to optimize the rotor diameter for the given design requirements, such as power output, cost, and weight.
- **Generator Type:** The turbine's kinetic energy is transformed into electrical power by the generator. Different generator types have different efficiencies and costs. Research can be done to evaluate the suitability of various generator types for the turbine design, such as induction, synchronous, or permanent magnet generators.
- **Structural Design:** The turbine must have a sturdy construction to resist the wind's pressures. Research can be done to evaluate the strength of the materials used for the turbine's components and to optimize the design to minimize material usage while maintaining structural integrity.
- **Performance Analysis:** Analytical methods and simulations can be used to analyze the performance of the turbine under different wind conditions. simulations can be used to model the aerodynamics of the turbine and predict the power output. Blade element momentum (BEM) theory can be used to estimate the power output based on the blade geometry and wind speed. Experimental testing can provide empirical data to validate the simulation results.

2. RESULTS OR FINDING

Design of vertical axis wind turbine

Design of vertical axis wind turbine made by using solid work software. The diameter of rotor is 1.4 m and height is 1.4 m and type of VAWT is savonius type.

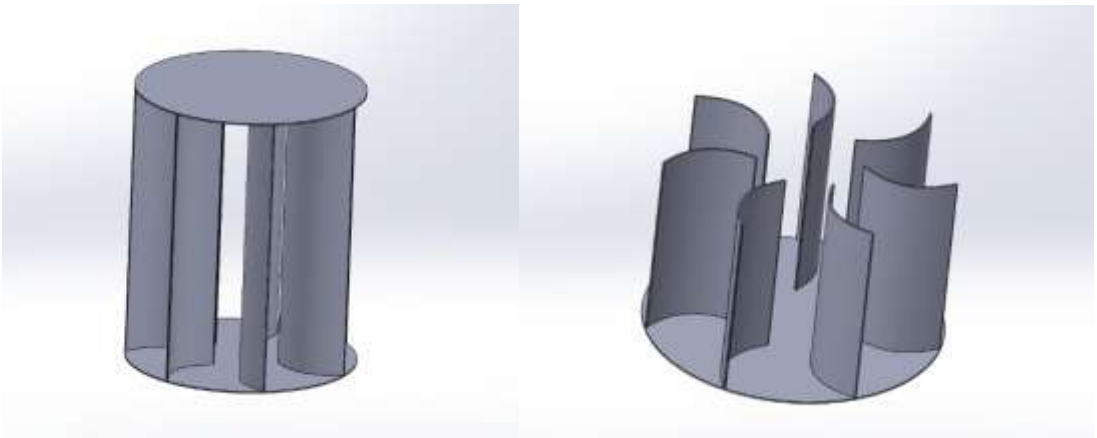

Figure: a) Vertical axis wind turbine made using SolidWorks b) sectional View of VAWT

Copyright The Author(s) 2023. This is an Open Access Article distributed under the CC BY license. (http://creativecommons.org/licenses/by/4.0/)

Journal of Energy Engineering and Thermodynamics
ISSN: 2815-0945
Vol: 03, No. 04, June-July 2023
http://journal.hmjournals.com/index.php/JEET
DOI: https://doi.org/10.55529/jeet.34.1.8

Simulation of VAWT using Ansys
Importing Geometry to Ansys

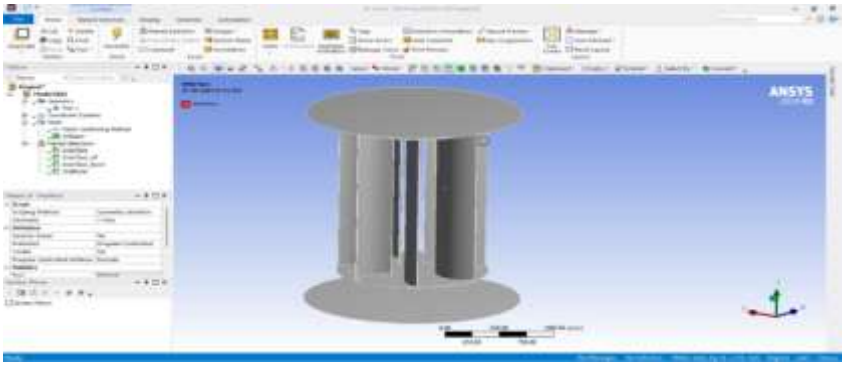

Figure: Importing CAD geometry to Ansys

Meshing of vertical axis wind turbine

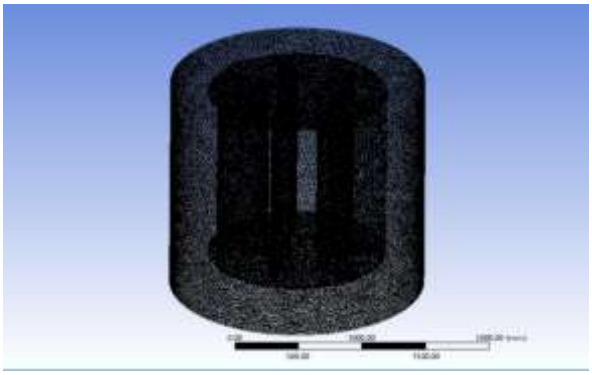

Figure: meshing of vertical axis wind turbine

Table: Mesh details

Domain	Nodes	Elements	Tetrahedra	Wedges	Pyramids	Hexahedra	Polyhedra
Domain 1	655	2247	2247	0	0	0	0
Rotor	218372	1025364	921070	92798	11496	0	0
All Domains	219027	1027611	923317	92798	11496	0	0

Copyright The Author(s) 2023. This is an Open Access Article distributed under the CC BY license. (http://creativecommons.org/licenses/by/4.0/)

Journal of Energy Engineering and Thermodynamics
ISSN: 2815-0945
Vol: 03, No. 04, June-July 2023
http://journal.hmjournals.com/index.php/JEET
DOI: https://doi.org/10.55529/jeet.34.1.8

Domain Interface

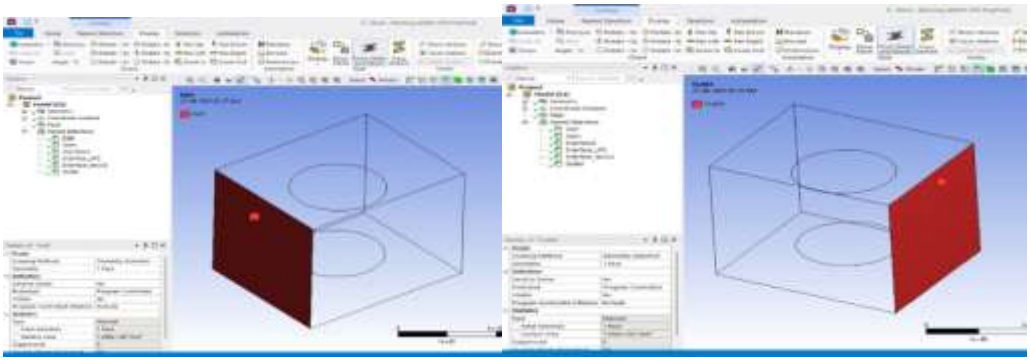

a) **b)**

Figure: a) Inlet b) Outlet

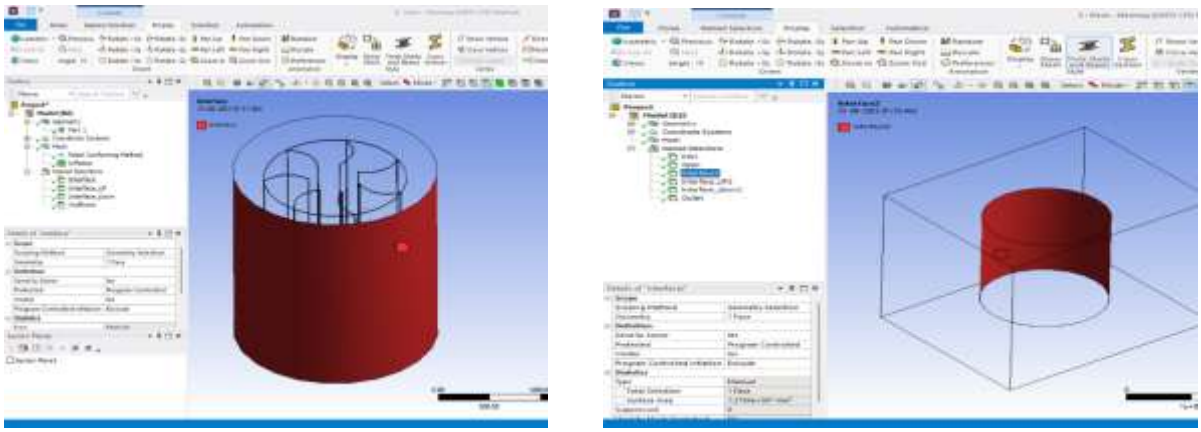

a) **b)**

Figure: a) Interface 1 b) Interface 2

Boundary Condition

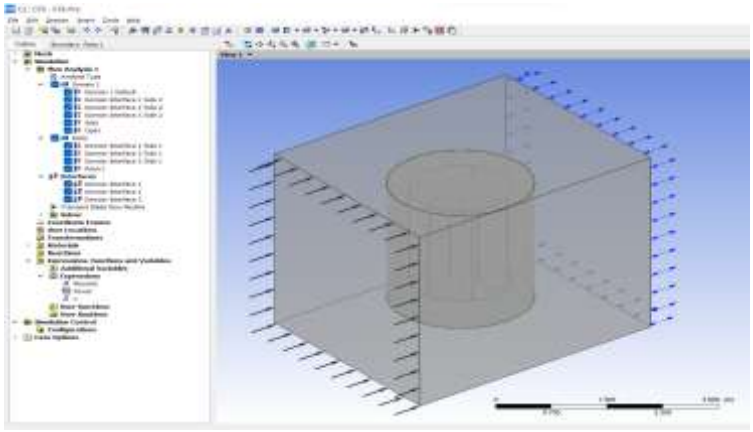

Figure: Setup of boundary condition

Copyright The Author(s) 2023. This is an Open Access Article distributed under the CC BY license. (http://creativecommons.org/licenses/by/4.0/)

Journal of Energy Engineering and Thermodynamics
ISSN: 2815-0945
Vol: 03, No. 04, June-July 2023
http://journal.hmjournals.com/index.php/JEET
DOI: https://doi.org/10.55529/jeet.34.1.8

Solution

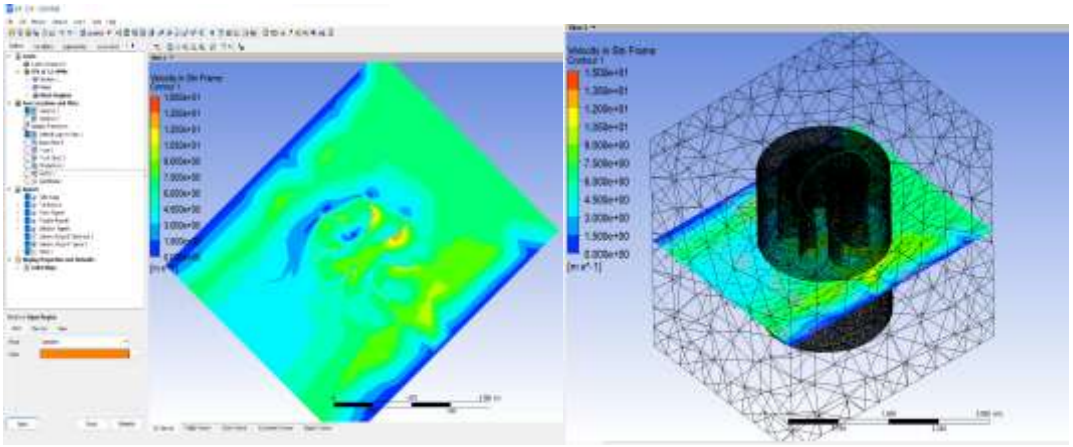

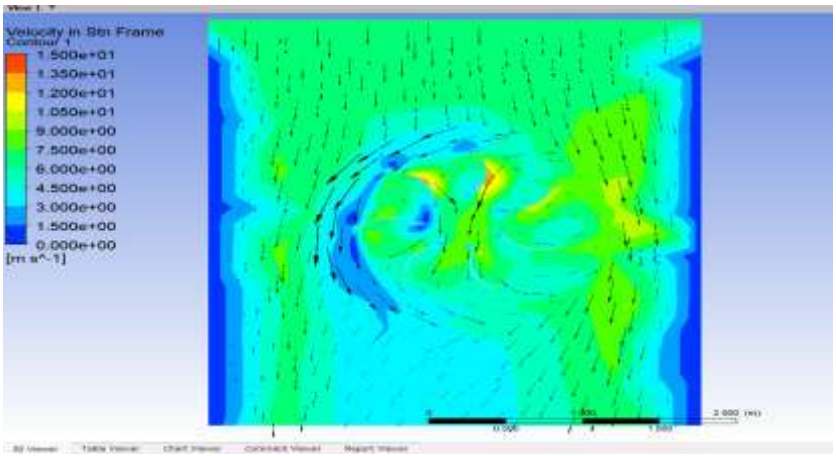

Figure: Velocity using CFX

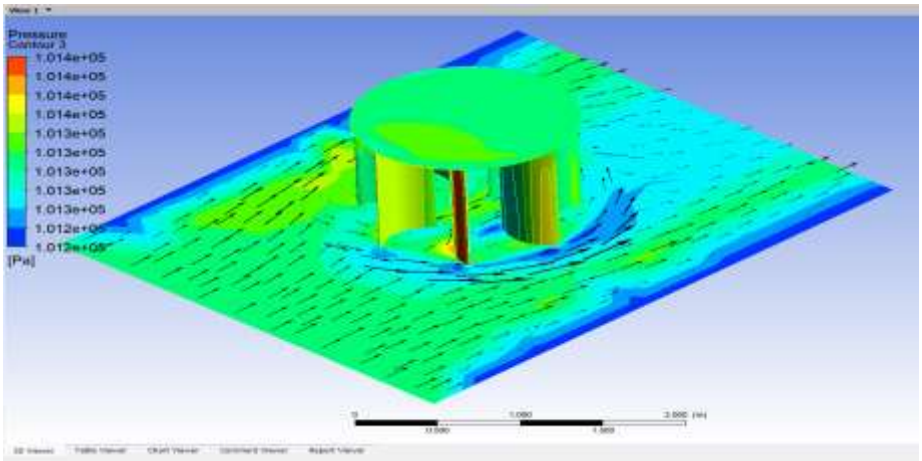

Figure: Pressure using CFX

Copyright The Author(s) 2023. This is an Open Access Article distributed under the CC BY license. (http://creativecommons.org/licenses/by/4.0/)

Journal of Energy Engineering and Thermodynamics
ISSN: 2815-0945
Vol: 03, No. 04, June-July 2023
http://journal.hmjournals.com/index.php/JEET
DOI: https://doi.org/10.55529/jeet.34.1.8

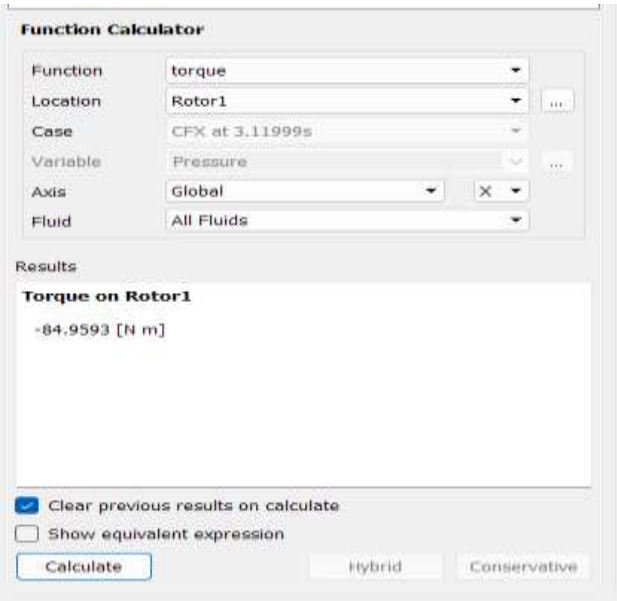

Figure: Torque using functional calculator

3. CONCLUSIONS

Small-scale wind turbine blades may be constructed from wood, making it possible to imagine building a cost-effective wind turbine using standard workshop equipment. The most power can be generated from a vertical axis wind turbine with the most blades, but a low solidity wind turbine may have trouble getting going on its own due to its rotor's inefficiency at low tip speeds. For any value of ambient wind speed, there exists an optimal rotating speed for the turbine at which maximum efficiency is reached. Energy output from a fixed-pitch wind turbine may be optimised by matching the rated airspeed to the typical wind speeds at the site of installation. When operating at the same speed, turbines with a larger radii are more efficient than those with a smaller radii because the greater tangential velocity results in lower angles of attack, larger Reynolds numbers, and therefore larger lift coefficients for the blades.

4. REFERENCES

1. "Vertical Axis Wind Turbines: History, Technology and Applications" by Y.H. Liu, C.X. Zhang, and Z.H. Chen - 2010
2. "Design and Analysis of a Vertical Axis Wind Turbine" by M. Nasiri, M. Shafiee, and M. Saidi - 2011
3. "Numerical Simulation and Experimental Validation of a Small-Scale Vertical Axis Wind Turbine" by F. Giannattasio, G. Camporeale, and A. Petrozzi - 2015
4. "Optimization of the Vertical Axis Wind Turbine Rotor Using CFD Analysis" by M. Šantl, B. Fuerst-Bjeliš, and S. Črne - 2018
5. "Design and Analysis of a Vertical Axis Wind Turbine Blade" by M. Nasiri, M. Shafiee, and M. Saidi – 2012

Copyright The Author(s) 2023. This is an Open Access Article distributed under the CC BY license. (http://creativecommons.org/licenses/by/4.0/)

Journal of Energy Engineering and Thermodynamics
ISSN: 2815-0945
Vol: 03, No. 04, June-July 2023
http://journal.hmjournals.com/index.php/JEET
DOI: https://doi.org/10.55529/jeet.34.1.8

6. "Design and Development of a Small-Scale Vertical Axis Wind Turbine for Educational Purposes" by E. Santoyo-Romero and A. Pedraza-Ortega - 2019
7. "Effect of Number of Blades on the Performance of Vertical Axis Wind Turbine" by A. M. Abdel-Latif, H. F. El-Batanouny, and A. A. Alsharafi - 2017
8. "Design and Testing of a Vertical Axis Wind Turbine" by S. A. Yousef and R. A. Juma - 2017

Copyright The Author(s) 2023. This is an Open Access Article distributed under the CC BY license. (http://creativecommons.org/licenses/by/4.0/)